INSTALLATION MANUAL

95847 / 05-2012 / Printed in Canada

Pour consulter la version française de ce guide, consultez le www.garaga.com / portes résidentielles. (Choisissez un modèle de porte et téléchargez le guide d'installation à partir de la section « Spécifications techniques »).

Dealer : _____

Telephone number : _____

Installer : _____

Date : _____

Serial number : _____

The serial number identifies your door and is kept in the manufacturer's archives. We suggest you keep it handy if you need to communicate with your Garaga Distributor.

GARAGA®

Every detail guaranteed™

8500, 25th Avenue,
St-Georges, Qc, Canada G6A 1K5
Tel.: 418 227-2828 info@garaga.com
www.garaga.com

PRODUCT MANUFACTURED IN CANADA

CERTIFIÉ / CERTIFIED
ISO 9001 : 2008

GENERAL INFORMATION

READ CAREFULLY BEFORE THE INSTALLATION OF YOUR GARAGA DOOR

The installation of a garage door is a considerable job which requires knowledge and preparation. This is why we highly recommend you hire someone specialized to do the job. A professional door installer will adjust the door perfectly and he generally guarantees his work. In other words, he is ready to come back and make further adjustments if necessary, within the warranty period.

You can obviously do the installation of your garage door yourself as long as:

- you have a good deal of experience in do-it-yourself projects;
- you have the right tools;
- you will have help in handling the panels and the pieces of hardware;
- you read the instructions in this manual BEFORE starting the installation of the door, not after.

The installation instructions which follow are meant to be general guidelines which cannot be considered, under any circumstance, as imperative and final instructions as to the installation of a residential garage door. The manufacturer cannot be held liable in the event of any damage which could result before while and after installing a residential garage door. The illustrations in this guide are as precise as possible, slight differences in detail may appear.

Your garage door is the biggest and heaviest moving part of your home. It must be installed properly in order to be safe, secure and trouble free for a long time. If you have any doubts concerning your skills in installing a garage door, do not hesitate to contact a professional.

LIST OF TOOLS THAT YOU WILL NEED:

- clamps or locking pliers
- screwdrivers
- a hammer
- a hacksaw
- a stepladder
- a level
- a tape measure
- a square
- saw horses
- drill (7/8” bit for optional end stile locks)
- a set of socket wrenches, 3/8, 7/16, 1/2 and 9/16 socket bits

LIST OF MATERIAL THAT YOU WILL NEED (NOT INCLUDED):

- perforated steel angle for horizontal tracks hanger with bolts and nuts
- two steel winding rods (diam.: 1/2”, lenght: 18”)
- screws for weatherstripping #8 x 1” (30 mm)

THIS SIGN IS USED REGULARLY THROUGHOUT THIS DOCUMENT. IT MEANS SPECIAL CARE MUST BE TAKEN FOR THE STEPS YOU ARE EXECUTING. CARELESSNESS AT ONE OF THESE POINTS COULD LEAD TO SERIOUS BODILY INJURIES OR HEAVY MATERIAL DAMAGES.

INSTALLATION MANUAL
RESIDENTIAL GARAGE DOORS

Garaga Inc. manufactures many models of residential garage doors: the Top Tech door (textured steel), H-Tech Plus and H-Tech (rustic woodgrain aluminum), North Hatley and Stratton 138 (Carriage House design), Eastman Estate (Full cross-buck design), Cambridge (Urban design), the Standard+ (light woodgrain steel), the Acadia 138 door (light woodgrain steel), the California (removable window). The installation of different models is similar, but with a few minor changes.

The first step when installing your garage door is to identify the door model you have purchased, because this guide is basically written for H-Tech, North Hatley, Eastman Estate, Cambridge and Standard+ models. If you purchased a Acadia 138 or a Stratton 138 doors, 1 3/8 in., R-12, you can still use this guide, only the installation instructions will appear as follows, with the title 1 3/8” doors clearly displayed. Example:

1 3/8” doors

Installation of a cable-lock or an end stile lock is recommended on these doors.

In this manual, the right and the left are as seen by looking at the opening of the door from the inside.

All the necessary parts for the installation of your door are provided except for the horizontal track supports (optional). We suggest you use a slotted angle of 1 1/4” X 1 1/4” (32 X 32 mm). GARAGA hardware is easy to recognize by the stamping of the word GARAGA on the tracks and other parts.

Identify the parts and separate the left ones from the right ones. The parts that need to be separated are the vertical tracks, the horizontal tracks (those with a curve in them), the bottom panel corner brackets, and the cable drums for torsion hardware. All other parts can go on either side. The parts are illustrated in this document when it is time to use them. A complete list of all hardware parts can be found in the hardware box.

You will find life-size illustrations of the screws, nuts, and bolts in this manual as you need them.

The hinges are identified by a number indicating on which panel they must be used. This number is engraved at the bottom of each hinge.

On one end of the panel, there is a factory stamp identifying the panel. This stamp indicates the position of the panel in the door and the interior side of the panel. The serial number of the door is identified at the end of the panels and on the inside of the bottom panel.

LOCATION OF STEEL PLATES AND WOOD BLOCKS FOR SCREWING HINGES AND HANDLES

Top Tech, H-Tech, North Hatley, Eastman Estate, Cambridge and Standard+ models

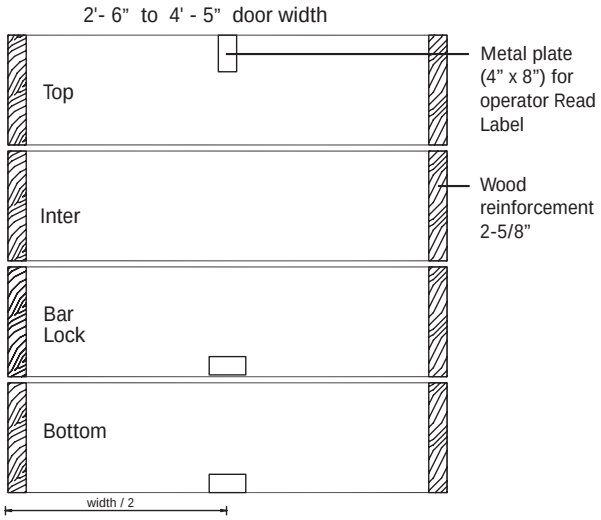

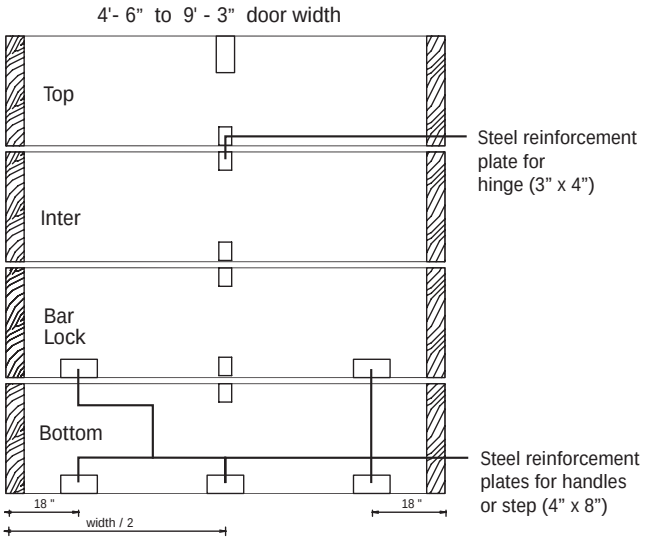

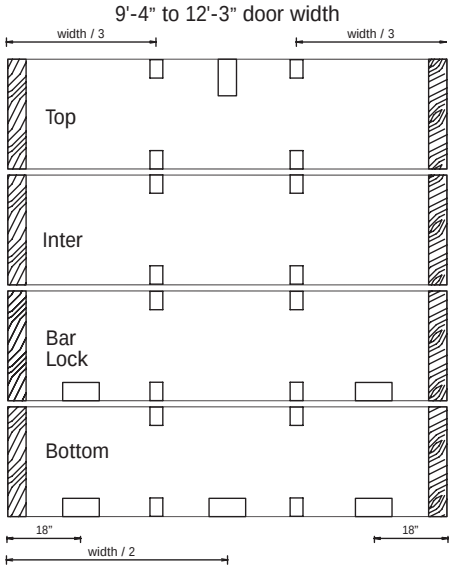

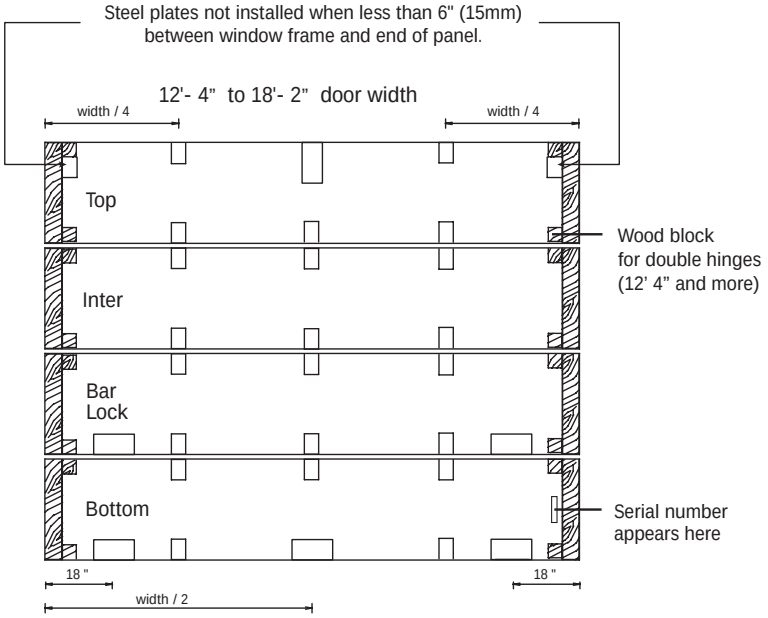

Note: Orange stickers do not indicate the exact location of plates. Light punch holes indicate the position of the steel plates.

1 3/8” doors

These panels are all identical, and may be used at any location in the door. You only have to follow the instructions related to “interior – exterior” of the door.

Orange stickers on the interior side of the door, (bottom of the panels) indicate locations of the steel reinforcement plates used for screwing: central hinges, handles, electric garage door opener in the top panel, (see page 5 and 6 for further explanations about these plates). The orange stickers on the lower part of the panels also indicate there are similar reinforcement plates on the top of the panel. (Punch marks indicate the exact location of the screws holding the hinges.)

SPECIAL SAFETY MEASURES

- The springs used in opening and closing a garage door support the entire weight of the garage door. This means that there is extreme tension in these springs and that any sudden and uncontrolled release of these springs is dangerous and could cause serious injuries.

- There are two kinds of springs used: extension springs or torsion springs. (See page 4 for illustrations of both systems.)

  - For either one of these spring systems, always use clamps or locking pliers to block the door and prevent it from moving.

  - For torsion springs, always use a solid steel rod of 1/2” X 18” (12 X 457 mm) to add or release tension; never use a screwdriver because it could easily slip and cause an accident or injury.

  - The wood block used as a base for the torsion spring anchor plate must be solidly fastened to the wall because it will be supporting the tension of the springs. Never try to move or modify this block while there is tension in the springs because a sudden release of tension could cause serious injuries.

  - For extension springs, make sure there is no tension in the springs by blocking the door at its highest position before proceeding to spring adjustments.

  - For extension springs, always use safety cables to compensate for a broken hook or spring which could otherwise release the spring like a cannonball across the garage.

- The rear hangers of the horizontal tracks must block the tracks both ways to keep the same distance between them, and hold the tracks from the ceiling.

LOCATION OF STEEL PLATES AND WOOD BLOCKS FOR SCREWING HINGES AND HANDLES

Acadia 138 and Stratton 138 models
1 3/8 in. (35 mm), R-12

5'-0", 8'-0" and 9'-0" (1524, 2438 and 2743 mm) wide

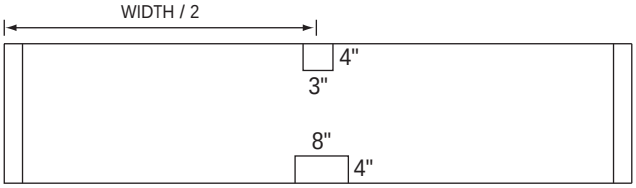

10'-0" and 12'-0" (3048 and 3658 mm) wide

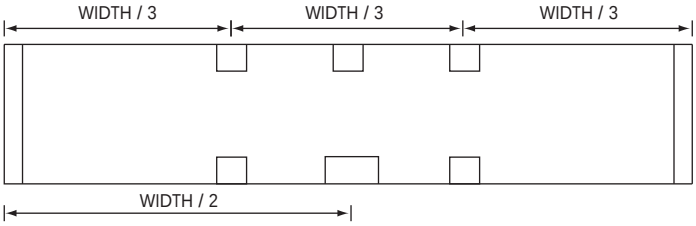

14'-0" and 16'-0" (4267 and 4877 mm) wide

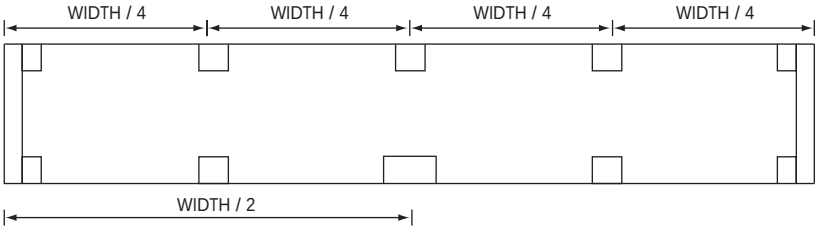

Steel plate
14 g, 3" x 4"

Steel plate
14 g, 8" x 4"

Note: to attach the electrical operator, we recommend to use a special bracket

IMPORTANT

SAFETY ADVICE STICKERS

Place safety stickers above the bottom bracket, to remind it is dangerous to handle the springs, the cables and bottom bracket.

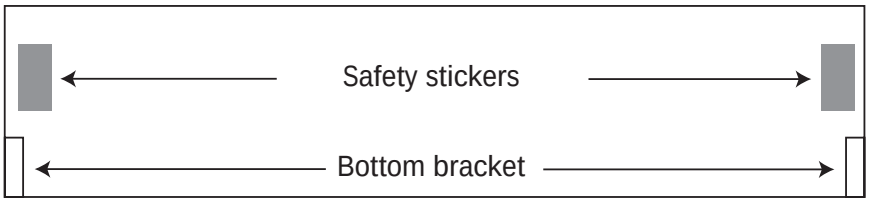

HANDLE AND STEP PLATE

The Consumer Product Safety Commission (CPSC) has developed in cooperation with the Door & Access Systems Manufacturs Association (DASMA) a new safety standard for USA residential garage doors, DASMA 116.

To avoid injury keep hands and fingers clear of section joints, track and other door parts while the door is moving.

WARNING

Watch your hands and fingers

In order to prevent any fingers or / and hand accident, the new standard require two handles or other suitable gripping points to be installed on the inside of the garage door, and two on the outside of the door, to open and close the door, and this regardless to the fact that the door may be motor operated.

1- An outside handle and inside step plate has to be installed on the bottom section, at a maximum of 6 inches from the edge, as instructed below:

Install the step plate at the interior and the handle at the exterior, using carriage bolts and nuts in the bottom holes of the step plate, and the self tapping screws in the top holes in the interior of the garage. Locate the reinforcement plate (4” x 8”) in the middle of the bottom panel. Adjust the step plate to it, and drill holes through the door from the interior.

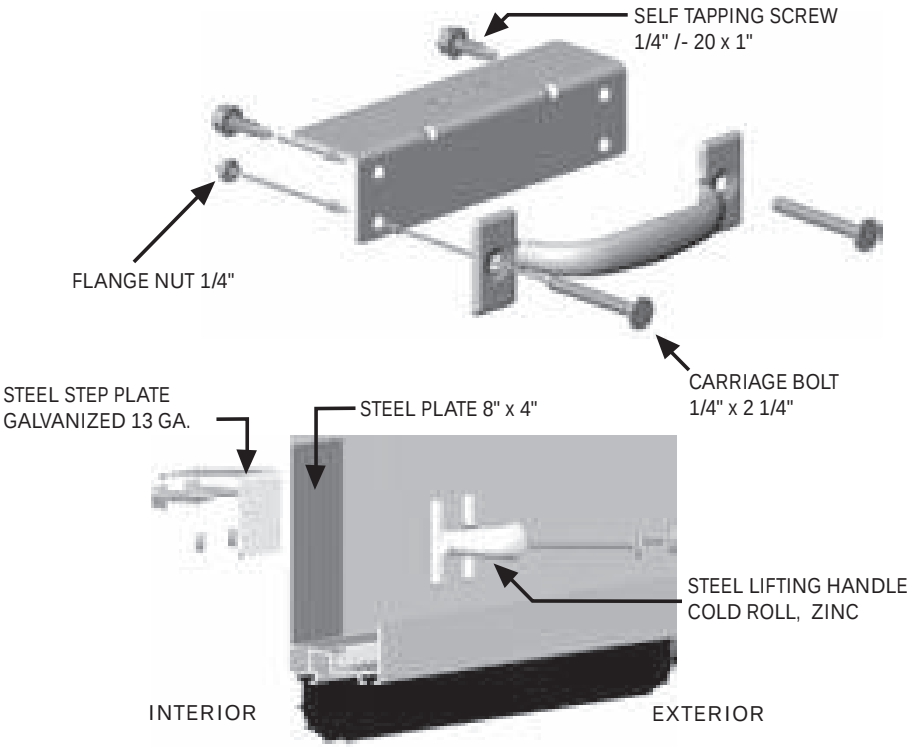

2- The second handle / gripping point (for USA Customers only) is to be installed right above the one at the edge of the bottom section, at least 20”, but not more than 30”, higher, and within 4“ of a section interface.

See the installation instructions below:

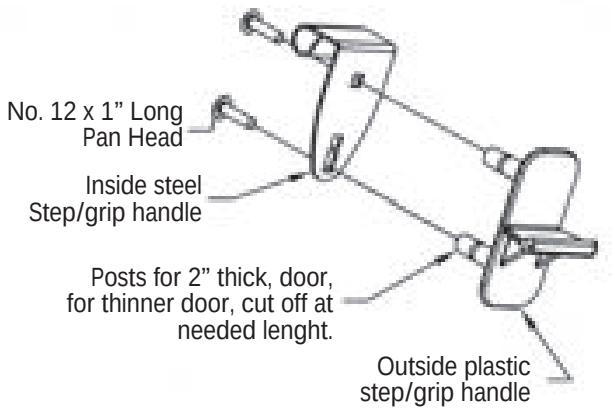

Using the template, mark and drill 2 holes of 1/2” diameter at 2-1/4” from each other.

Push in the out side plastic grip handle, and install the inside steel grip handle using the screws.

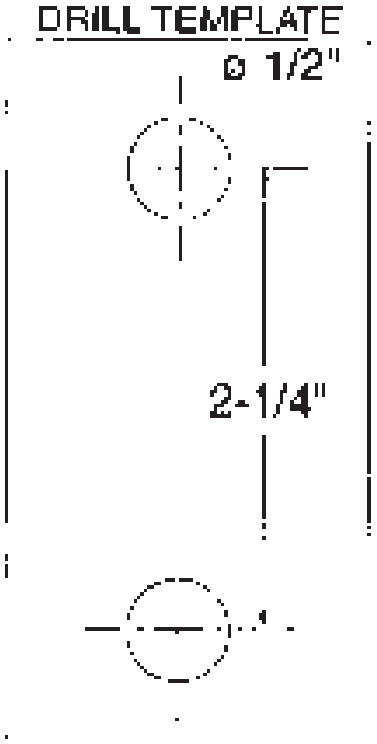

HOW TO INSTALL YOUR GARAGE DOOR

STEP 1: GETTING THE OPENING READY

Make sure that the size of the opening matches the size of the door. For example: a door of 9' X 7' (2743 X 2134 mm) needs an opening of 9 feet (2,743 mm) wide by 7 feet (2,134 mm) high.

The position of the header and back jambs are very important. The header must be flush (on the same plane) with back jambs. The back jambs must be perpendicular, plumb, and square. (Figure 4)

Check headroom and rear clearance of the door so as to have enough room for the door to work properly (Figures 4 and 5).

Required headroom and sideroom to operate a door

(free space available between the top jamb and trusses)

Radius	10"	12"	15"	Low headroom Rear mounted	Low headroom Front mounted
Residential Extension	8 1/2"	10"	n.a.	5"	n.a.
Residential Torsion		12"	15"	5"	8"

Add 2" if you install an electrical operator

required rear clearance for the door: h+28" (711 mm)
required rear clearance with an operator: h+40"(1016 mm)
(h = height of the door)

- minimum space between the door jamb and wall: 6" (13 cm)
- minimum space between two doors installed side by side: 12" (26 cm)

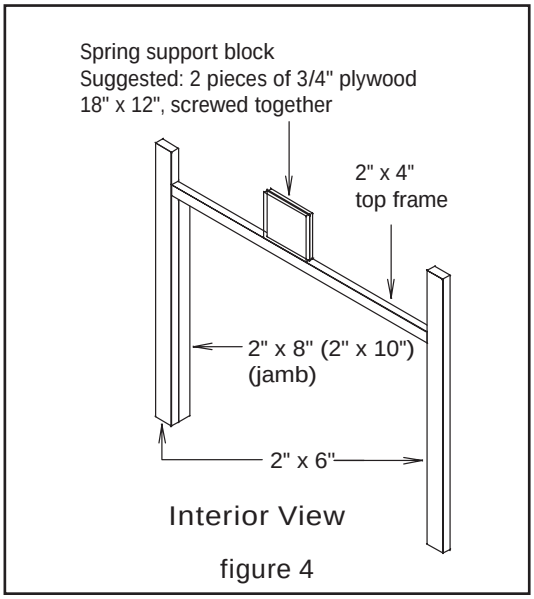

figure 4

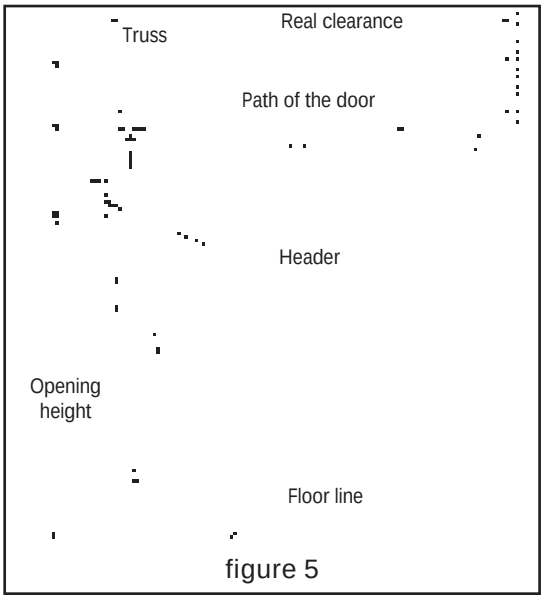

figure 5

STEP 2: GETTING THE PANELS READY

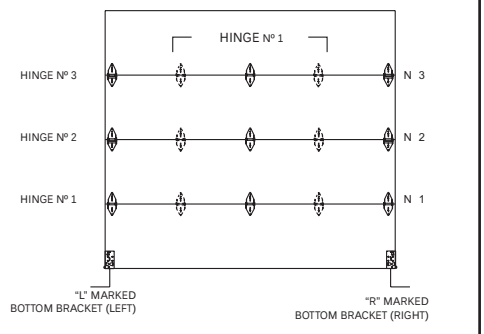

figure 6

Unwrap the panels and place them on two wood boards with their exterior side facing down and in the same order as they will be once the door is installed: #1= Bottom, #2= Barlock, #3= Interm., #4= Top. Make sure you lay the polyethylene foam from the wrapping on the boards to avoid scratching the door. Check the factory stamp on the end of each panel in order to identify them. Place the panels evenly, align and tighten them well.

Screw in the bottom panel corner brackets as well as the lower parts of the hinges. Use the punch marks to align and center the hinges with the screws. Always make sure you are using the proper hinge for the panel. Be careful about which screws you are using. (See: Where to use screws and lags)

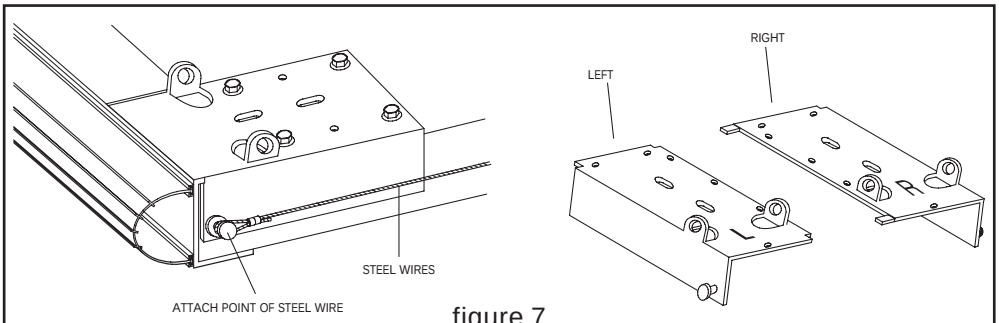

figure 7

WHERE TO USE SCREWS AND LAGS

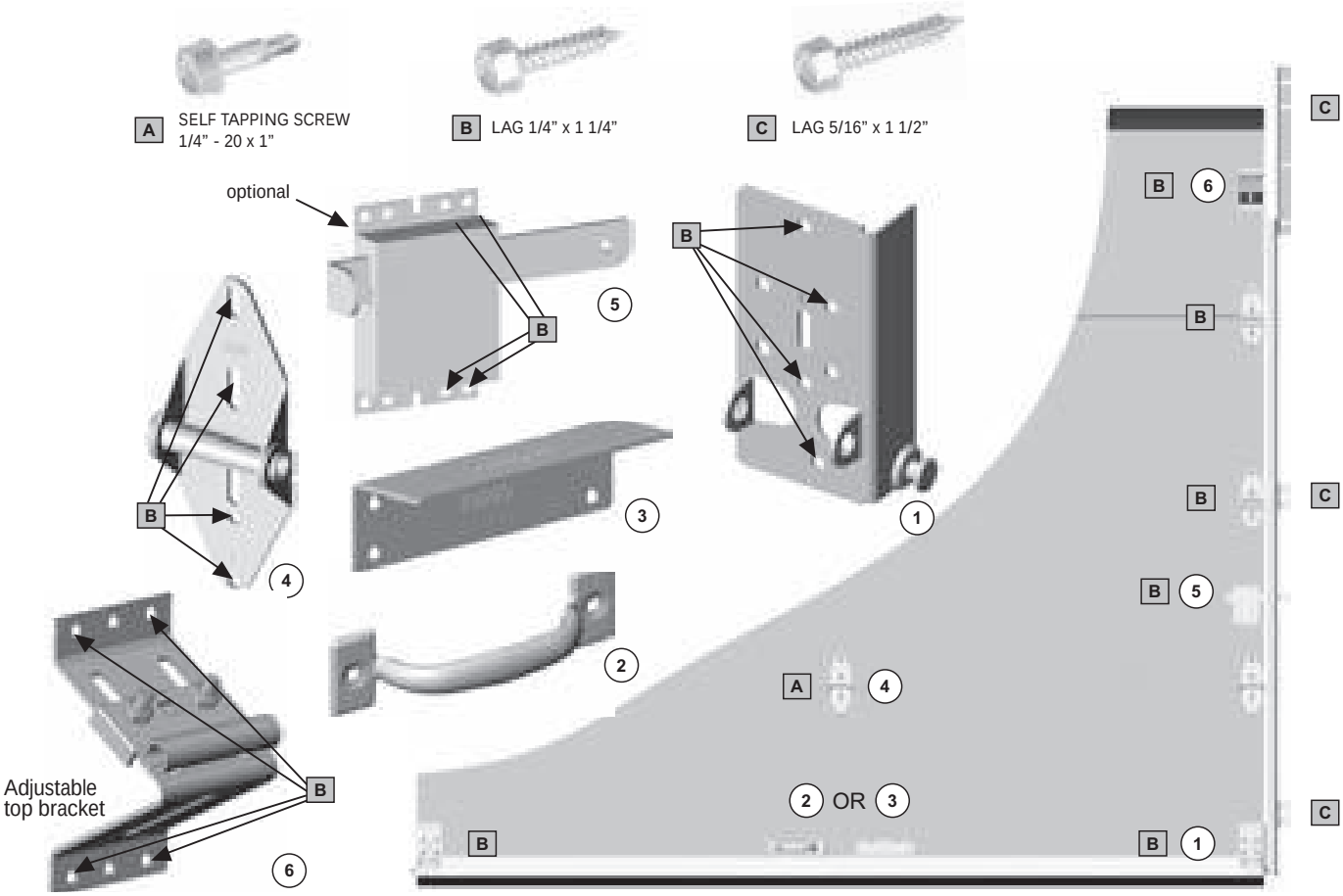

STEP 3: THE INSTALLATION OF THE PANELS

Keep hands and fingers clear of section joints, tracks, and other door parts when the door is opening and closing to avoid injury.

Center the bottom panel in the opening by pressing it firmly against the ground and by making sure that the top of the panel is really level. If necessary, place a wooden wedge to keep the panel level. Centering the panel enables you to locate the exact place where you should screw the vertical tracks into the interior jamb.

It is of the most importance that the top ends of the vertical tracks be level. In order to achieve this, you might have to lift one of the vertical tracks or cut the other. You must execute this step at this point, before screwing in the tracks.

Screw a track into the jamb (always start from the highest side), at 1/2” (13 mm) from the floor, by leaving 1/4” (6 mm) between the track and the end of the panel.

Put the rollers into the hinge and into the corner bracket of the bottom panel (Figure 11). If the hinge has two holes, always use the one farthest from the door. Lift the panel, ease the rollers into the track, and place the panel parallel to the opening, on the ground, at the exact location it will be at the end of the installation (Figure 12). Make sure everything is square with the tracks.

Put the roller into the hinge located in the top corner of the second panel. Lift the panel, ease the roller into the track. Then lay the second panel on the first one and screw the hinges in.

Repeat the same steps for the remaining panels.

Put the rollers into the opposite corner bracket of the bottom panel as well as into the hinges of the panels. Ease the second vertical track over these rollers and screw the track into the jamb by leaving the same 1/4” (6 mm) between the track and the door as on the first side.

Note: Garaga doors of 12’ 4” width or more (3759 mm) have an internal structure that allows the installation of double hinges on each end of panel section. Long stem rollers are optional hardware.

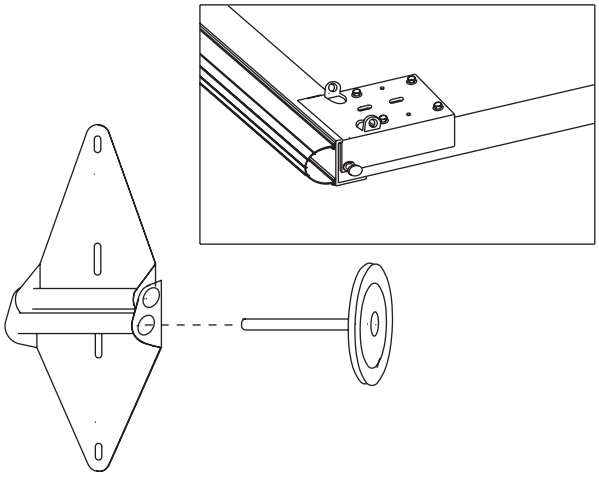

figure 11

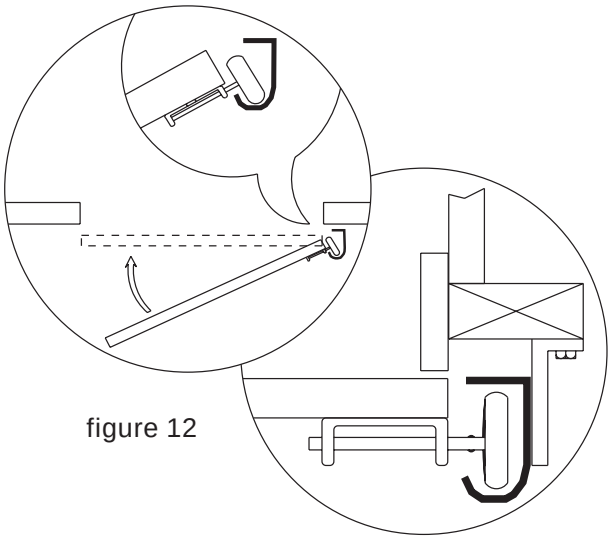

figure 12

Once the door is installed, you simply add the second set of hinges by sliding them into the long rods of the hinges which have already been installed and by screwing them in next to those already in place. The use of these additional hinges is simply to reinforce and make for a smoother opening and closing of the door (see Figure 29 for the illustration).

IMPORTANT - IMPORTANT - IMPORTANT

The vertical tracks must be parallel. In other words, the distance between the tracks must be the same at the top and at the bottom.

The top of the vertical tracks must be level as compared to each other. This can be checked by measuring the distance between the top of the door and the top of the track. If they are not level, cut the bottom of one of the tracks or lift the other.

STEP 4: THE INSTALLATION OF THE HORIZONTAL TRACKS

Install the horizontal tracks as shown. (Fig. 13)

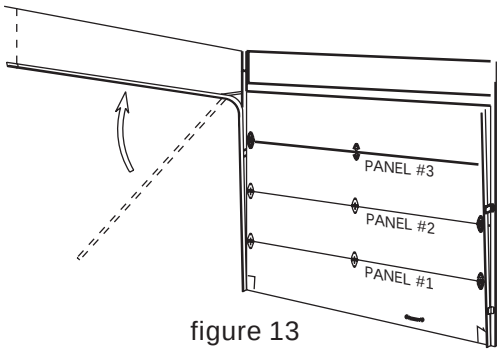

figure 13

Fasten (Figure 14) the steel angle of the horizontal track to the specially designed bracket of the vertical track with the 5/16” X 3/4” (8 mm X 19 mm) bolts.

Then, fasten (Figure 14) the curved part of the horizontal track to the vertical track using the track bolts (Figure 15).

Temporarily tie the horizontal track to the ceiling by using a steel wire.

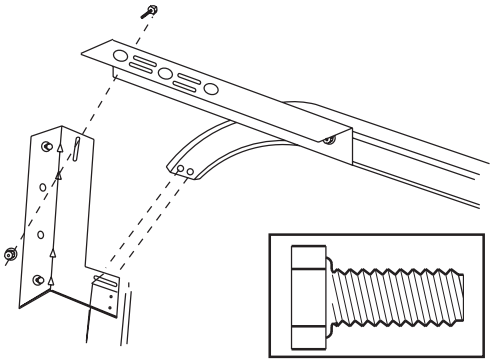
figure 14

Put the rollers into the upper brackets (Figure 16); ease the rollers into the track and slide down the bracket. Fasten these brackets with the axle of the rollers 4 to 6’’ (100 to 152 mm) from the top of the section according to the type of installation.

Install the rear hangers (not included) (Figure 18). Align the horizontal tracks with the door header and keep exactly the same distance between the tracks. This particular point can be checked by measuring the diagonals, as shown in Figure 17. There must be a slight upward slope in the horizontal tracks: 1/8” per foot in door height (10 mm per 1000 mm).

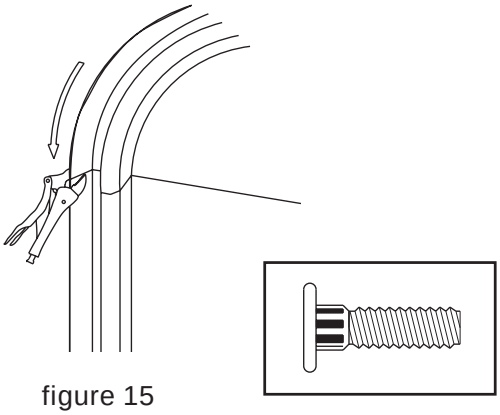
figure 15

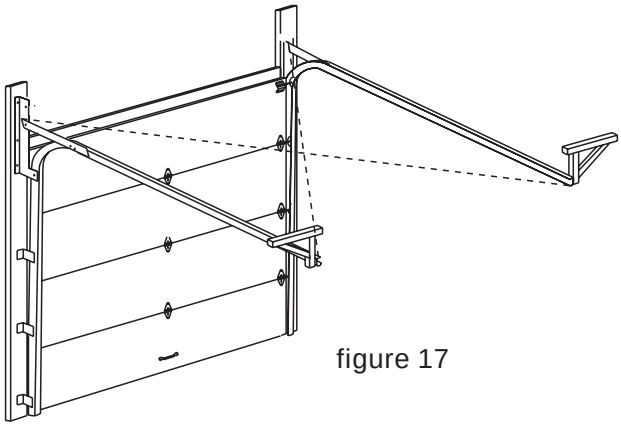
figure 17

Horizontal track installations must done as figure 18, to prevent sideway movement of the tracks.

figure 16

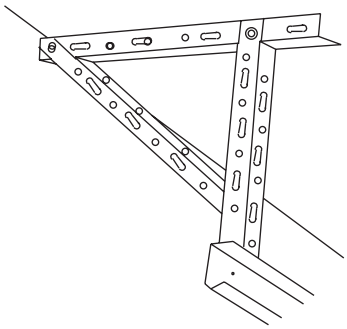
figure 18

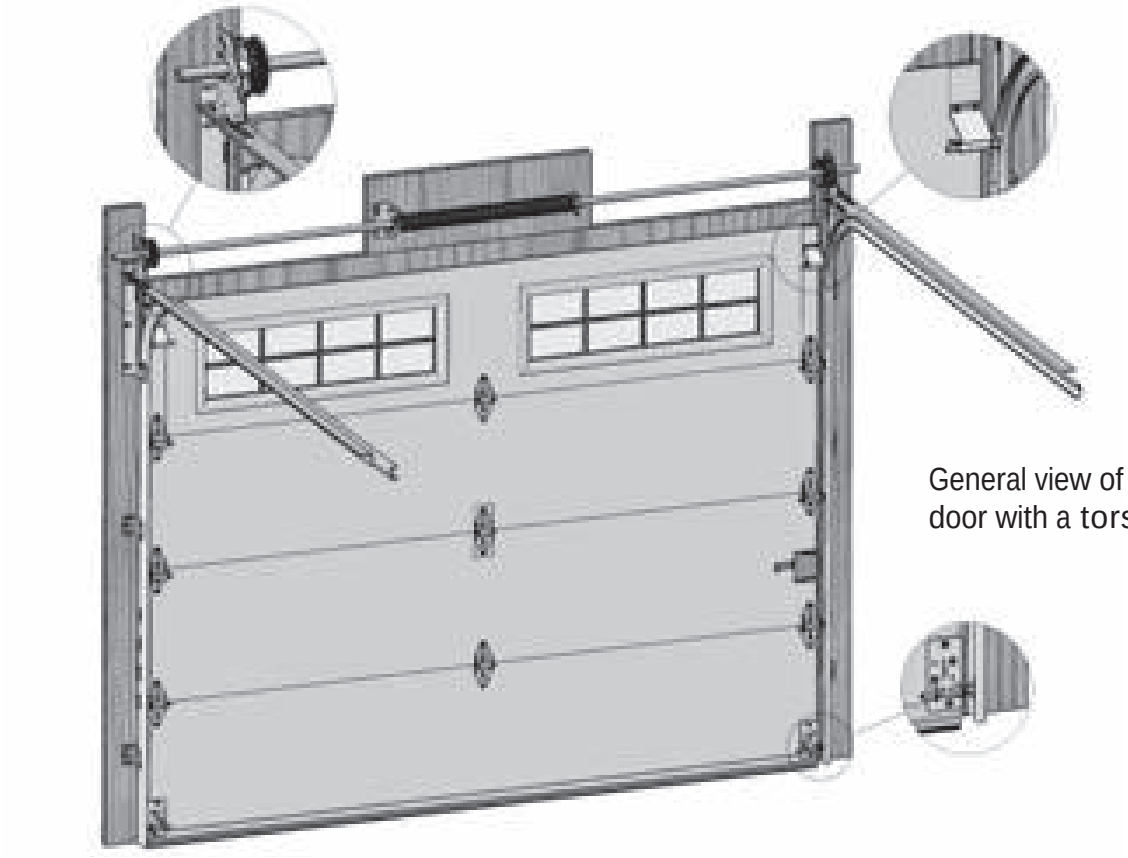

General view of an overhead garage door with a torsion spring

IF YOU ARE USING HARDWARE FOR EXTENSION SPRINGS, GO TO SECT. 5.1

STEP 5: THE INSTALLATION OF THE TORSION SPRING AND THE CABLES

Keep the door closed.

Assemble the cable drums, end bearing plates, and the shaft or the tube that has already been mounted with its spring as shown (Figure 2).

NOTICE THE CENTER TORSION SPRING ANCHOR PLATE: THE CUT CORNER MUST BE THE LOWER CORNER.

The drums are marked LH and RH; LH goes on the left side and RH goes on the right side, as seen from the inside of the garage. They could also be identified by red or black paint; in this case, the black goes on the right and the red goes on the left.

Raise the torsion spring assembly above the tracks. Bolt the end bearing plates to the horizontal tracks with 5/16” X 3/4” bolts. Firmly fasten the center anchor plate to the header; this is the base for the tension of the springs. The shaft has to be straight and level. Press the drums on the end bearing plates without tightening them.

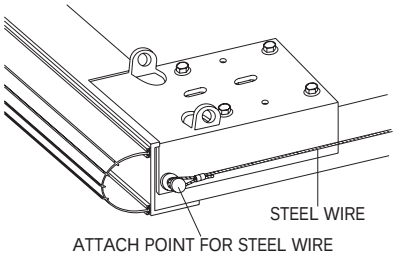

figure 20

Failure to properly insert the looped ends of the cables can result in severe injury when spring tension is applied.

Fasten the loop of the steel cable to its fastening point on the bottom panel corner bracket (Figure 20) and make it run between the door and the track up to the cable drum. Hook the end of the cable with a stop sleeve to the special notch on the drum. In order to have an identical tension on both cables, lock the shaft with a pair of locking pliers braced against the header (Figure 22), turn the drums manually until there is tension in the cables, lock them with the specially designed pressure screws on the drum. Repeat this step for the other cable.

WARNING! THE NEXT STEP (WINDING THE TORSION SPRING) CALLS FOR EXTREME CAUTION: CARELESSNESS COULD LEAD TO SERIOUS INJURIES.

While leaving the lock-grip pliers tightened to the shaft and braced to the header, lock the door in closed position using the side lock or other lock-grip pliers fixed to a vertical track just above a roller. Loosen the set screws on the winding cone of the spring, and then using the winding bar (NOT INCLUDED) to wind the spring by turning the winding cone TOWARD THE CEILING (see drawings below) the number of turns as stated on the label affixed on the spring. Tighten the set screws of the winding cone (Add half a turn after feeling a pressure on the tube or shaft). The winding bars must have the same diameter (1/2" - 13 mm) as the holes on the winding cone and must be pushed in as far as possible into these holes NEVER USE SCREWDRIVERS FOR THIS STEP.

Once this operation is completed, remove the locking pliers from the shaft, get down the stepladder, then only unlock the door, open and close the door slowly manually. Proceed to any spring adjustment by following the same procedure and same precautions.

To keep track of the number of turns of the spring easier, it is useful to make a line with a pencil on the winding cone. Remember that each hole on the winding cone is one quarter of a turn. The number of turns are indicated on the spring label.

The wire must point in the same direction as you are winding.
N.B. Always wind toward the ceiling.

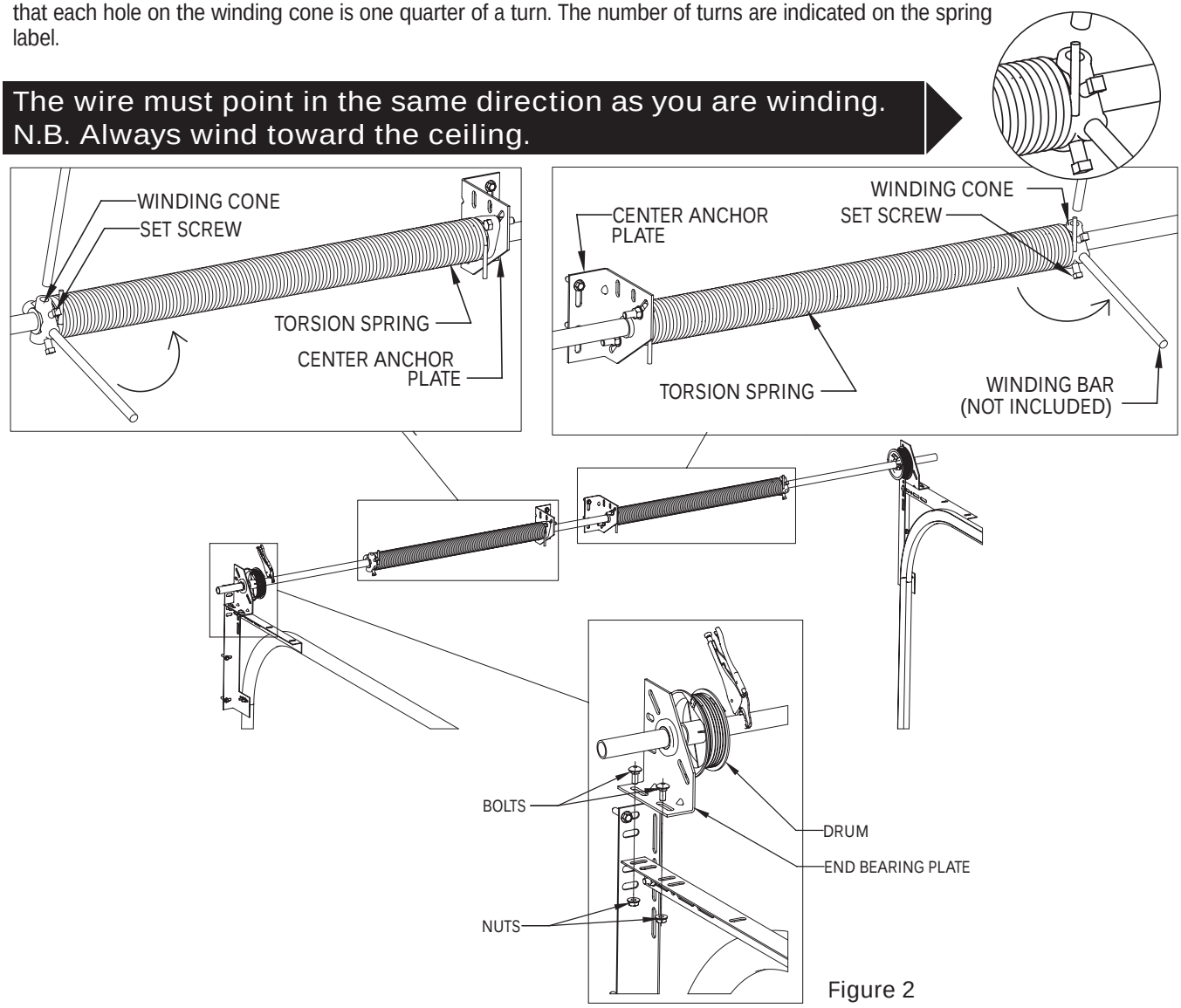

Figure 2

If there are two springs, proceed the same way for the second, with the same number of turns.

NEVER REMOVE A WINDING BAR OF ITS HOLE UNTIL THE OTHER WINDING BAR IS IN PLACE AND THAT YOU ARE HOLDING IT FIRMLY. YOU MUST BE VERY CAREFUL AT THIS POINT.

After having tightened everything carefully, remove the winding bars and the locking pliers.

You can now check if the door is well-balanced; ideally, it should stabilize where you stop pushing it up or pulling it down. The “net” weight of a door, regardless of its size, should never exceed 10 pounds.

A slight tendency to go up or down does not matter. However, if the door opens by itself as soon as you let it go or if it closes too fast and hits the floor hard, you will have to adjust the spring accordingly.

Before proceeding the adjustment, close the door, lock it, lock the spring shaft with a pair of locking pliers, insert a winding bar into a hole of the winding cone, hold it tightly, and only then can you loosen the pressure screw of the winding cone. Make the winding bar go downward if the door goes up alone; or push the winding bar upward if the door goes down by itself.

Add or take off 1/2 a turn at a time, one spring at a time if there are two, and check. Most of all, do not forget to tighten the pressure screw before taking out the winding bars.

STEP 5.1: THE INSTALLATION OF THE EXTENSION SPRINGS AND THE CABLES

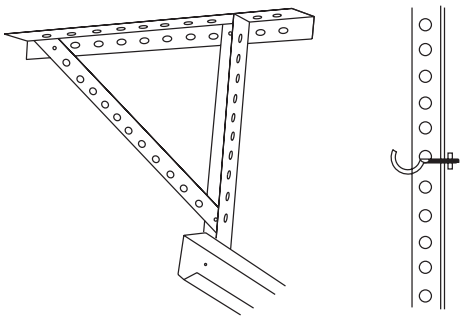

figure 23

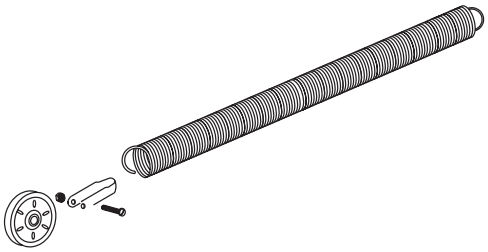

figure 24

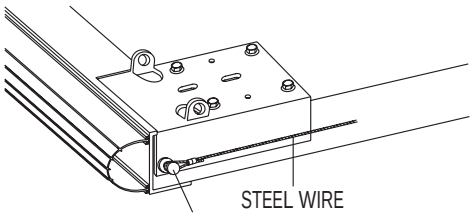

figure 25

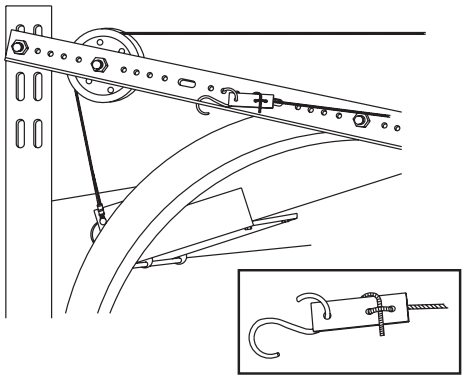

figure 26

Open the door completely and block it in this position with clamps or locking pliers.

Fasten the eye bolt to the back support of the horizontal track (Figure 23) as high as possible without exceeding 18” high. Hook one of the ends of the spring to this eye. Fasten the “U”-shaped hook to the other end and place the pulley in the “U”. Use the bolt as the axle for the pulley (Figure 24).

Fasten the other pulley to the steel angle of the horizontal track with the 3/8” X 1 1/2” bolt.

Once the steel cable is fastened to the bottom panel corner bracket (see Figure 25), run the other end over the pulley at the top of the vertical track, then through the pulley which is attached to the spring, and then tie it to the three-hole holding plate which is fastened to the slotted steel angle of the horizontal track with an “S” hook. Pull the steel cable in the holding plate until it is under tension. Execute the same steps for the other cable. See figure 27 for an illustration of the completed installation.

Once the door is well-balanced, install the safety cables (offered as an option with the hardware) by running them through the middle of the springs and by fastening them carefully to the ends as shown in Figure 27.

Now close the door and check if it is properly balanced; ideally, it should stabilize when you stop pushing it up or pulling installation.

A slight tendency to go up or down does not matter. However, if the door opens by itself as soon as you let it go or if it closes too fast and hits the floor hard, you will have do adjust the springs accordingly.

Open the door and block it in this position with clamps or locking pliers. Adjust the tension by moving the “S” hook forward and backward on the horizontal steel angle (Figure 26). You may even have to change the position of the holding plate by sliding it in one direction or another on the steel cable in order to get the required tension.

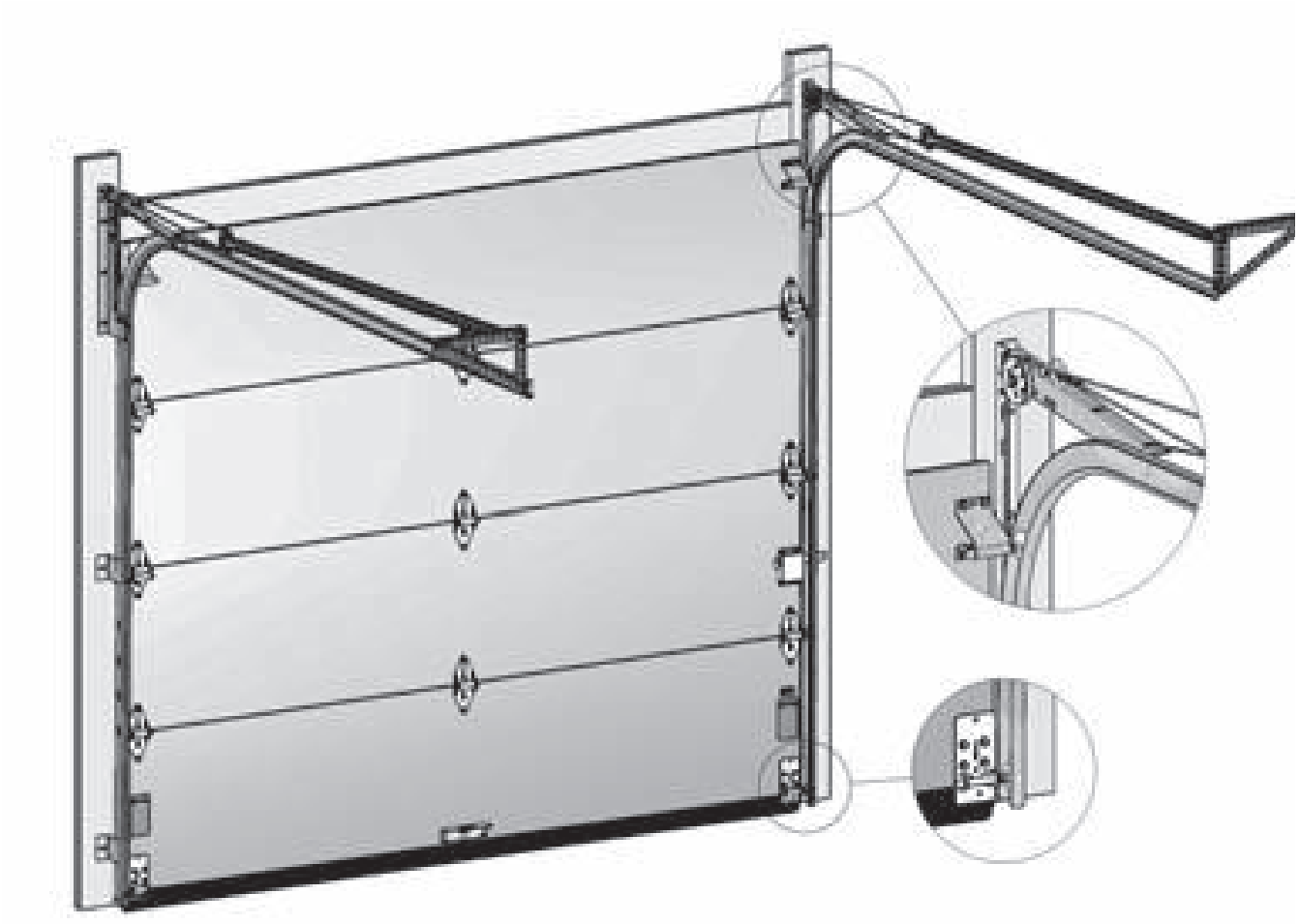

General view of an overhead garage door with a extension springs

LOW HEADROOM MOVEMENT

The low headroom hardware allows to install a sectionnal overhead garage door whererever the free space between the header and the ceiling or the trusses is less than 10”.

Double horizontal tracks are used to make the top door section turn quicker and decreases the required space: a 5” free headroom allows the installation of the door (7” is needed if an electric operator is used).

The L.H.R. hardware is available in both torsion or extension spring systems.

The technical installation is similar to the one used with for standard hardware. The only difference is in the hardware components: horizontal tracks, the bottom brackets, as well as the brackets for the top rollers. (See following illustrations).

The position of the drums for the torsion system, and of the springs in the extension system, require to install the steel cables outside the tracks, through the pulleys, and to the bottom brackets. The cables position is one of the main difference with the standard system.

IMPORTANT INSTALLATION TIP:

To make the installation easier and give a better access to the drums set screws, install the drums in reversed, i.e. the left drum will be installed on the right side and the right drum will be installed on the left side.

(See page 19-20 for spring assembling instructions.)

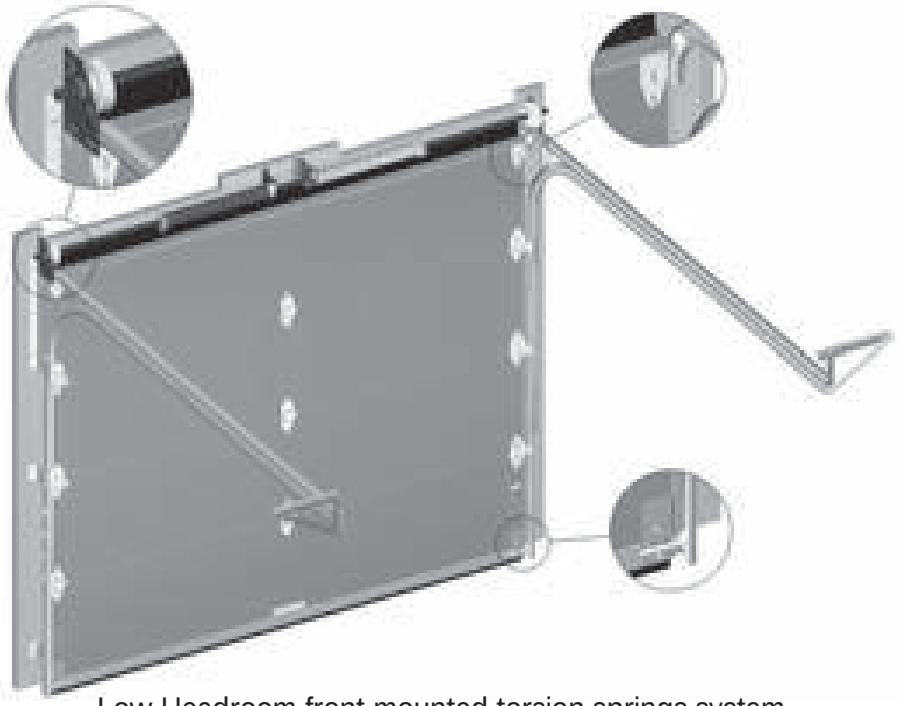

Low Headroom front mounted torsion springs system
with normal bottom brackets

Always installed with an electric troley operator

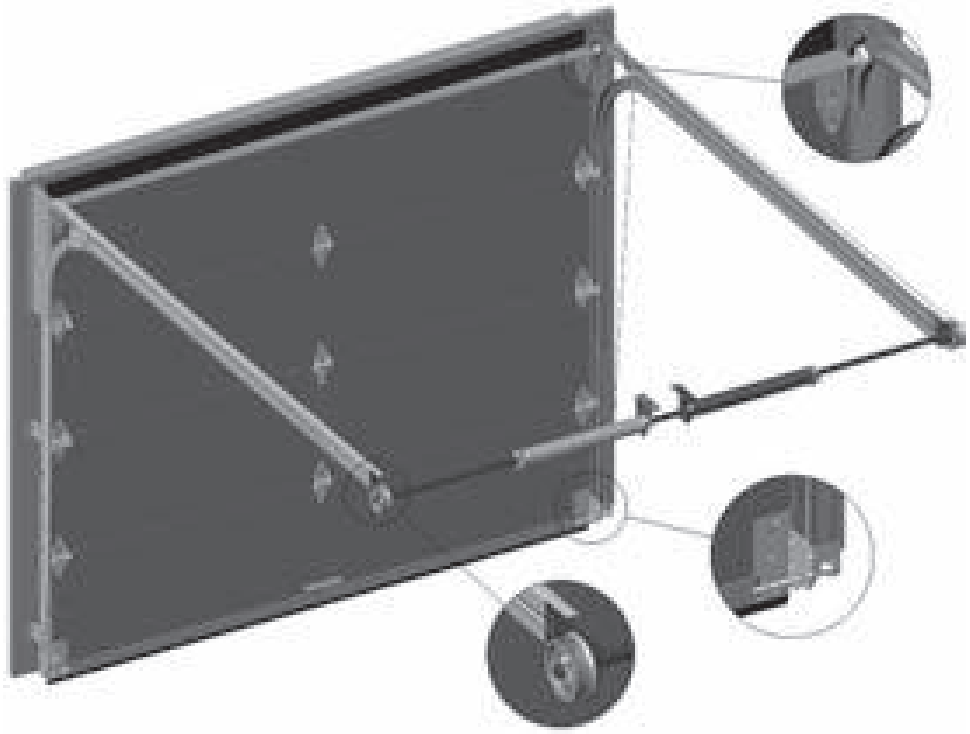

Low Headroom rear mounted torsion springs system

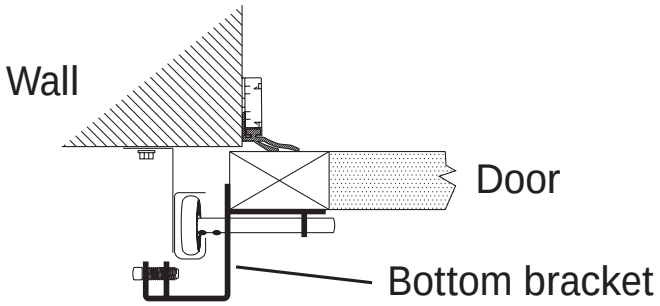

OVER HEAD VIEW

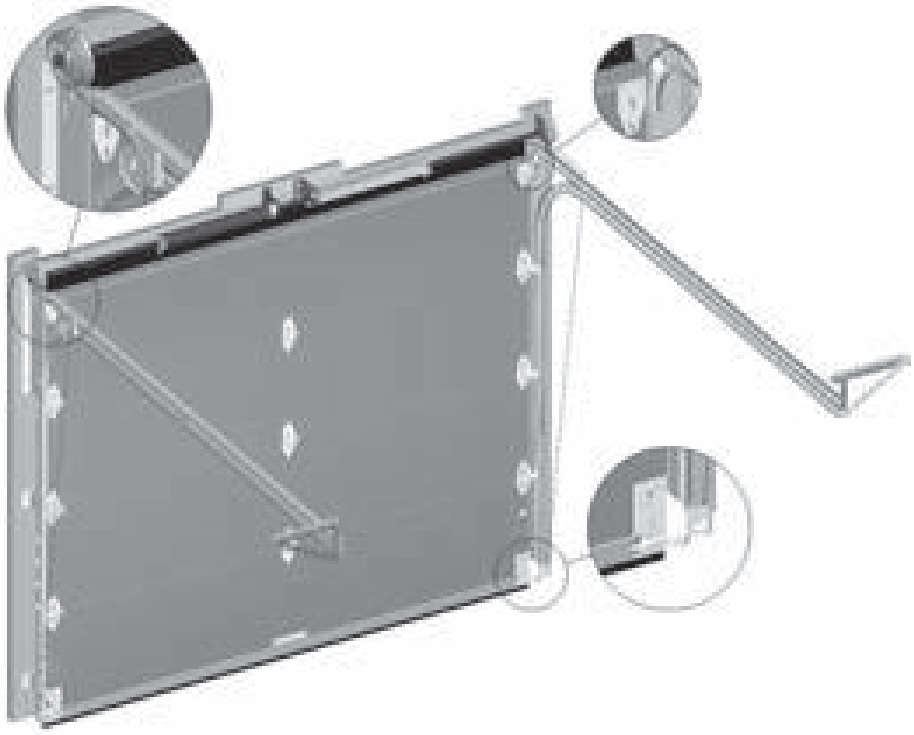

Low Headroom front mounted torsion springs system

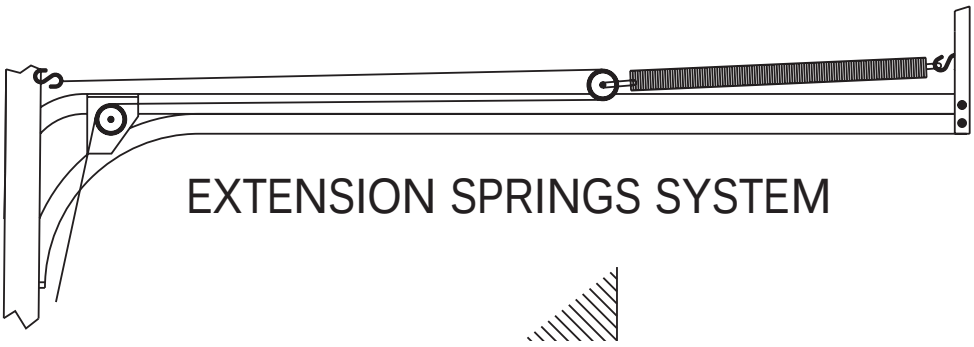

EXTENSION SPRINGS SYSTEM

INSTALLATION OF HORIZONTAL REINFORCEMENTS FOR DOORS OF 12’ - 4” (3759 mm) and more

Garaga pre-installs at their plant, (for door models: Top Tech, H-Tech Plus, H-Tech and North Hatley) 10 feet wide and more an aluminum extrusion, with an horizontal protection or not according to model, as a top weatherstripping retainer and longitudinal reinforcement strut (see figure 32). The following Garaga hardware is included as standard equipement, on doors 12’ 4” or more: 3 reinforcement struts (4 struts for 5 panel doors), which are used for the same purpose of longitudinal reinforcement.

Standard+, Acadia 138 and Stratton 138

There is no top weatherstripping on Standard+, Acadia 138 and Stratton 138 model. They are available, non installed, as an option on Standard+ doors.

Figure 29 shows how they are installed. More explicitly, they are fastened to the top of the panels at the same time as the hinges. Another, more efficient way of installing them consists of drilling the struts at the same location as the holes in the hinges and screwing them directly in these, without any clips. Self-drilling screws are not supplied.

Struts position on the panels

Doors with an aluminum extrusion on the top panel

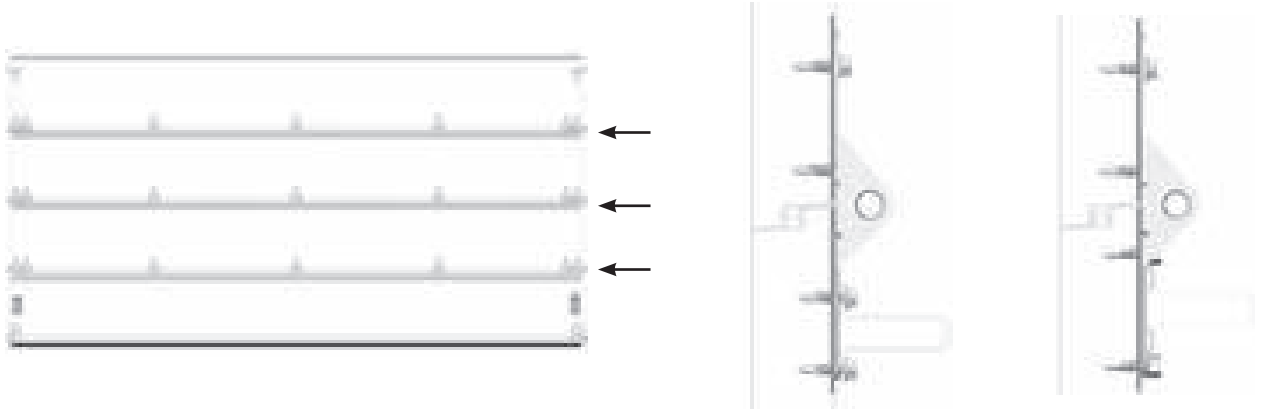

Doors with no aluminum extrusion on the top panel

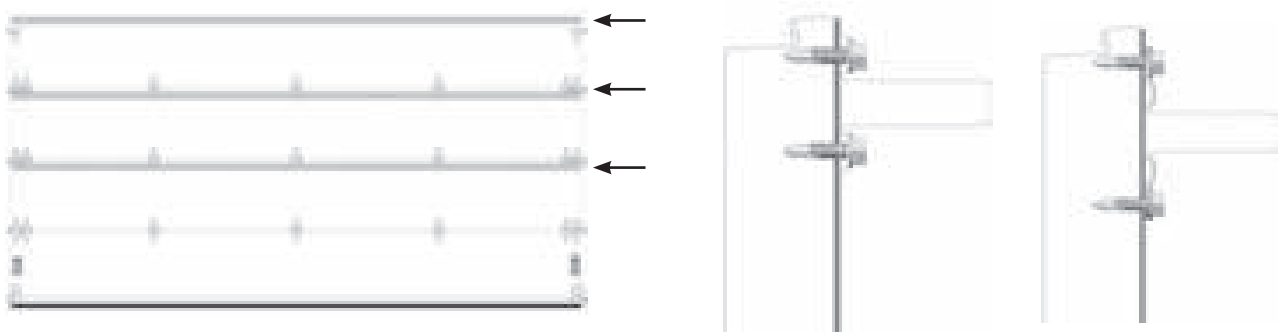

(Note: Self-drilling screws for top section are not supplied)

figure 29

THE INSTALLATION OF THE CENTRAL BAR LOCK

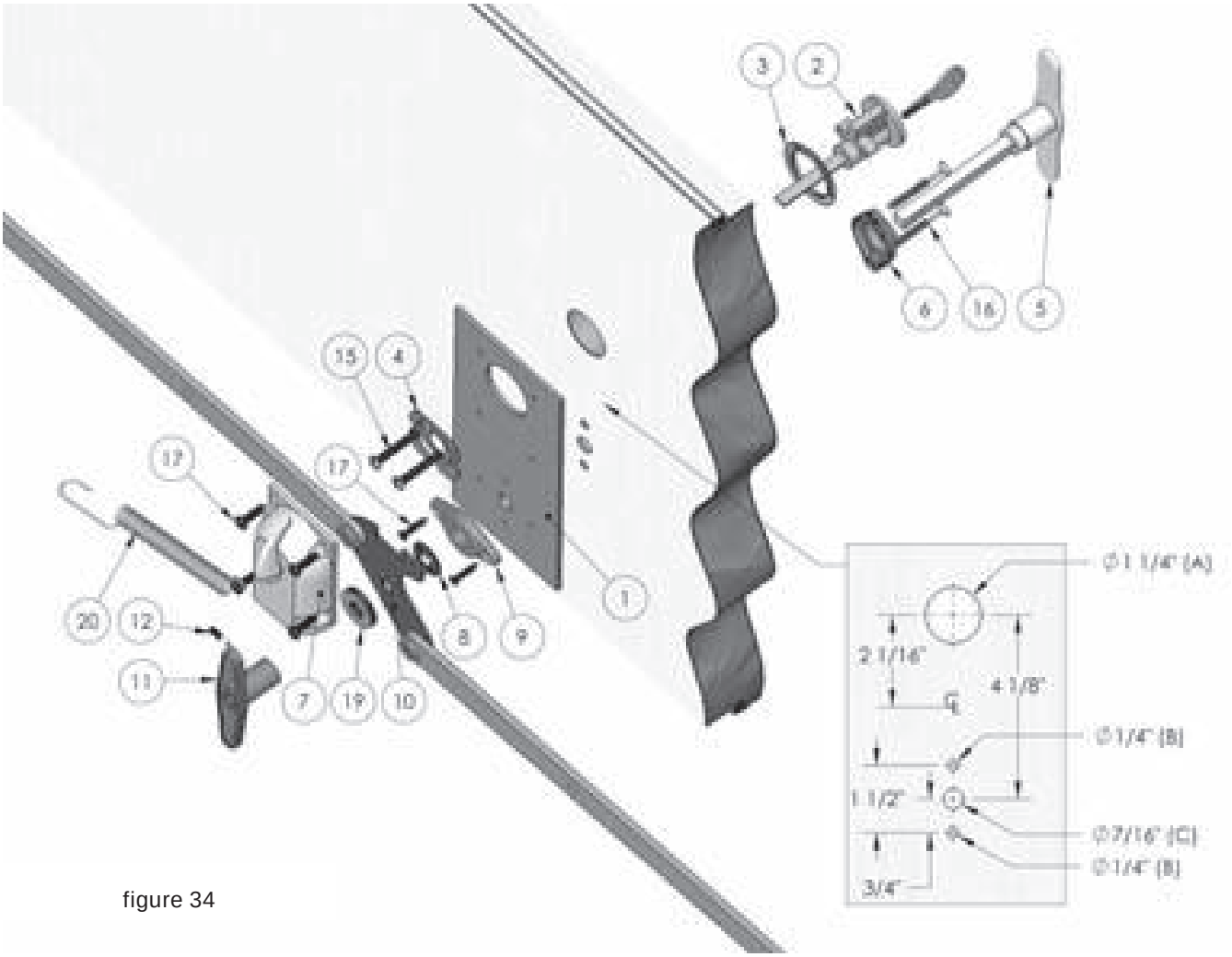

figure 34

1. On the outside of the bar lock panel, draw a cross in the center of the panel using a pencil;
2. Using figure 34 as a reference, mark the location of the four holes on the panel for A (barrel), B (screws) and C (handle);
3. Use a punch on the location marks from step 2, and then drill the four holes as straight as possible with the size bit indicated on the drawing.
4. Slide the exterior barrel (2) and trim ring (3) into hole (A). (The teeth of the key must be facing up and the key hole must be at the bottom of the barrel);
5. Position the steel plate (1) on the inside of the panel;
6. From the inside of the panel, insert plate (4) in hole (A) by positioning the round part downwards;
7. Insert 10 x 1 1/2” screws (15) in plate (4), align the screws in the holes of the outside barrel (2) and tighten the screws (make sure the plate is well aligned);
   a. The 1 1/2” screws can be cut to compensate for the thickness of the door.
8. Insert the inside lock (7) in the shaft of the outside barrel (2) and fasten it to the steel plate (1) with four 3/8” screws (17) using a square head screw driver; Be sure to insert the bottom left screw in the round end of the return spring (20) before installing;
9. From the inside of the panel secure the plate (9) over hole (C) with two 3/8” screws (17);

10. Insert outside handle (5) in trim plate (6) and insert through hole (C);
11. Insert both 2 1/4” screws (16) through holes (B), align them in the steel plate holes and tighten;
12. Cut the excess length of the 2 1/4” screws flush with the steel plate;
13. From the inside of the panel install the black locking washer (8), the revolving plate (10) and flat washers (19) to prevent the outside handle (5) from moving; Slide the inside handle (11) over the handle shaft.
14. Align the hole of the inside handle (11) with one of the holes of the shaft and insert a locking pin (12). (Adjust the thickness with flat washers);
15. Slide guides (13 and 14) in both rods;
16. Turn the handle to insert both rods in the rail holes, make sure the rods move freely and fasten both guides (13 and 14) at 1 1/2” from each end of the panel with 3/4” screws (18);
17. Insert the other side of the return spring (20) in the hole of the left rod.

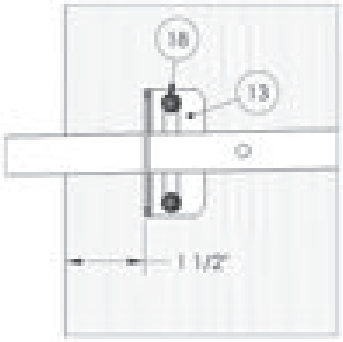

figure 33

INSTALLATION OF THE SIDE LOCK (Figure 33) (Optional)

With a screw driver, remove the metal piece that covers the lock access hole in the vertical track.

Place the case of the lock so that the lock moves freely in the hole designed for this purpose in the vertical track.

Fasten the case to the wood block at the end of the door with the lag screws (wood).

Repeat these steps for the other end of the door.

NOTE: IF YOU ARE INSTALLING AN ELECTRIC GARAGE DOOR OPENER, YOU DO NOT NEED A SIDE LOCK. IT COULD BE DANGEROUS TO USE SUCH A LOCK SYSTEM.

CABLE LOCK

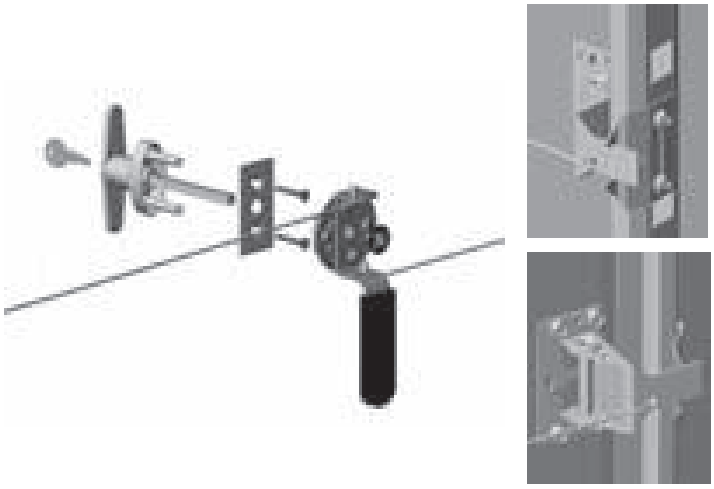

figure 35

END STILE LOCK

figure 36

TROUBLESHOOTING

1- The door becomes very heavy and only goes up halfway.
The torsion spring(s) has been installed backwards; see step 5.

2- The door opens very fast and is hard to bring back down.
The spring has been wound too much, it is too tight. Adjust the tension. See step 5 or 5.1, according to the type of spring.

3- The door closes fast and is hard to lift.
The spring has not been wound enough, it is too loose. Adjust the tension. See step 5 or 5.1, according to the type of spring.

4- The door works well but it goes back up 2 to 3 inches.
The spring is a little too tight. Adjust the tension. See step 5 or 5.1, according to the type of spring.

5- The door does not close completely flush with the ground.
The floor is possibly uneven so you will have to make a level threshold.

6- The door is hard to open at first.
The weatherstripping is too tight. Loosen it and place it a little farther from the door (the base of the weatherstripping should be at about 1/2” from the door).

7- The door is hard to open at the end.
The horizontal tracks are not perpendicular with the axis of the door. Use a tape measure to check this out. See Figure 17.

8- The top panel does not close completely.
Adjust the position of the upper brackets. See Figure 16.

ELECTRIC OPERATOR INSTALLATION

Please consult the installation manual supplied by the operator manufacturer.

Note that the screws attaching the pulling rod to the door are not supplied. You will need 2 self tapping screws. See with your Garaga dealer. See page 5 for location of the reinforcement plate for operator.

If you install an automatic garage door opener you must remove the pull rope to avoid risk of strangulation or personnal injury.

1 3/8” doors

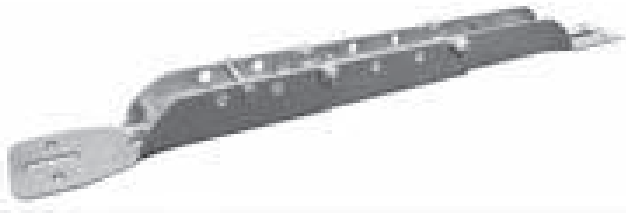

In order to install an electric operator, you must first fix a steel angle between the two reinforcement plates of the top section (see page 6 for location) with self tapping metal screws. Once the steel angle installed, you can attach the pull-bar of the operator to the steel angle. You can use steel perforated angle, but we recommend the use of the operator bracket (see to the right) designed for this purpose, and available at your Garaga dealer.